A Self-Powered Gas Sensor Integrated Circuit Based on Photovoltaic Energy Harvesting

Phan Dang Hung[1] and Min Kyu Je[a]
Department of Electrical Engineering, Korea Advanced Institute of Science and Technology
E-mail : [1]hungphandang@kaist.ac.kr

***Abstract* - A self-powered gas sensor integrated circuit (IC) suitable for wireless sensor nodes is designed in 0.18 µm CMOS process. The novel idea of using the output of the photovoltaic (PV) cell covered by the gas-sensing film allows the proposed sensor system to have low power consumption and compact size. A dual-input shared-inductor boost converter is used to harvest energy efficiently from two PV cells instead of connecting these cells in parallel when the system is exposed to gases. This shows up to 11% improvement of conversion efficiency at 2% H_2 gas concentration. Maximum end-to-end efficiency of 88% is achieved at an output power of 3 mW, and the quiescent current is only 289 nA. An input-offset-storage autozeroing technique is used for opamp offset cancellation to achieve high-accuracy gas detection. A modified split-capacitor digital-to-analog converter (DAC) architecture is used for achieving a small area in the signal-processing block.**

***Keywords*—Energy Harvesting, Offset Cancellation, Photovoltaic Cell, Self-Powered, Shared Inductor, Wireless Sensor Node**

I. INTRODUCTION

Gas leak is one of the biggest challenges that many workplaces are facing because it leads to severe health problems. Therefore, it is very important to detect the existence of toxic gases for the healthcare applications.

Wireless Sensor Nodes (WSN), which consist of a sensing unit, a wireless transceiver, and a battery, can be used to measure the gas condition of many points in the workplace. Because battery life is the main issue in the WSN, energy harvesting systems are developed to increase the autonomy of the nodes. However, it is very difficult to make a compact node because an energy harvesting unit (EHU) is required to harvest energy from energy sources. Thus, it is very propitious to reduce the size of EHU while making it operate as long as possible. In addition, many kinds of gas sensors are bulky and power-hungry as they require local heating for sensing operation.

As an alternative for lower power consumption, colorimetric sensors have been developed. Fig. 1 shows a structure of the colorimetric sensor which consists of a gas-sensitive layer and a polymer layer. When the sensor is exposed to gases, the sensing material reacts with the gas, and the color of the gas-sensitive layer is changed. Fig. 2 shows a configuration of the gas sensing device used to measure gas concentration based on the change of color. An LED generates light, and the photodiode (PD) measures the amount of light passing through the sensor.

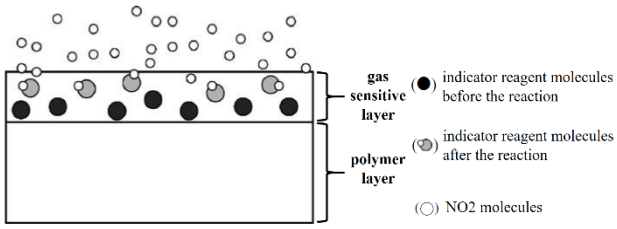

Fig. 1. Structure of colorimetric sensor [1]

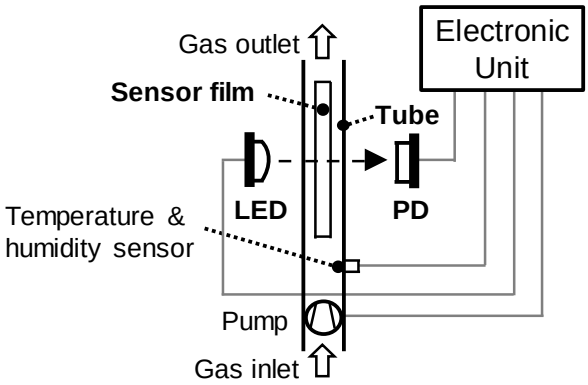

Fig. 2. Configuration of the portable gas sensing device [1]

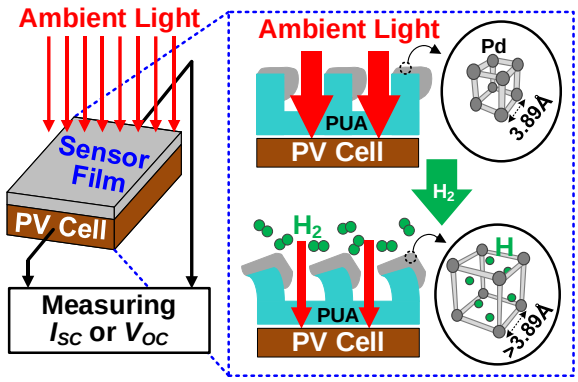

Fig. 3. Principle configuration of self-powered gas sensor [2]

a. Corresponding author; mkje@kaist.ac.kr

Manuscript Received Nov. 11, 2022, Revised Dec. 23, 2022, Accepted Dec. 29, 2022

This is an Open Access article distributed under the terms of the Creative Commons Attribution Non-Commercial License (http://creativecommons.org/licenses/by-nc/4.0) which permits unrestricted non-commercial use, distribution, and reproduction in any medium, provided the original work is properly cited.

Fig. 3 shows the working principle of an improved colorimetric gas sensor [2]. A PV cell is covered by a Pd-polyurethane acrylate (PUA) nanograting sensor film [2]. Before gas exposure, the sensor film is transparent. After gas exposure, the color of the sensor film is changed. That is, the light transmission is changed when the light comes to the film. The light transmission change during H_2 exposure is detected by measuring the short-circuit current (ISC) or open-circuit voltage (V_{OC}) output of the PV cell because the transmission change is in proportion to the current or voltage change.

The most important improvement of this sensor is that this sensor generates power itself and does not need the LED and PD when ambient light is enough. In addition, its size is small because this sensor does not require external components such as PD. As a result, this colorimetric gas sensor is well-suitable for gas sensing WSN due to its energy harvesting characteristics and small size.

We propose an IC which measures H_2 exposure using energy generated by this sensor itself. In addition, this sensor can be used in insufficient ambient light conditions when our IC and an LED are used. The power consumption of LED is minimized by turning on the LED only for a short time required for gas measurement.

II. CIRCUIT IMPLEMENTATION

Fig. 4 and Fig. 5 show the configuration and operation scenario of the system, respectively. Our IC measures the change of VOC before gas exposure and after gas exposure (ΔV_{OC}) to detect H_2 exposure because ΔV_{OC} is in proportional to H_2 exposure as shown in Fig. 6.

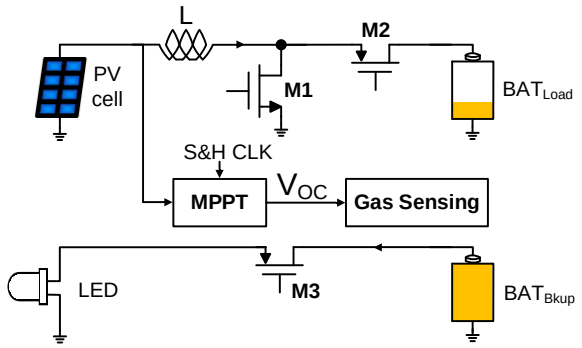

Fig. 4. Simplified system configuration

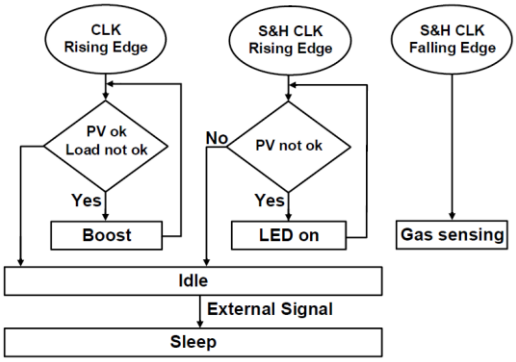

Fig. 5. Operation scenario of the system

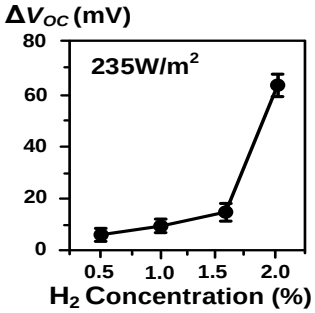

Fig. 6. Relationship between H_2 concentrations and the voltage change

When the ambient light is sufficient, energy is transferred from the PV cell to the battery while the LED is off. A fractional open-circuit voltage (FOCV) maximum power point tracking (MPPT) method is used to regulate the PV to the maximum power point, which allows the energy harvesting system to achieve the highest efficiency [3]. In this condition, H_2 exposure can be obtained by measuring VOC. Although the gas sensor does not need an LED and a backup battery when the ambient light is sufficient, our system uses an LED and a backup battery to measure H_2 exposure in dark conditions. By turning on the LED to supply the light for the PV cell, our system still has V_{OC} for gas sensing.

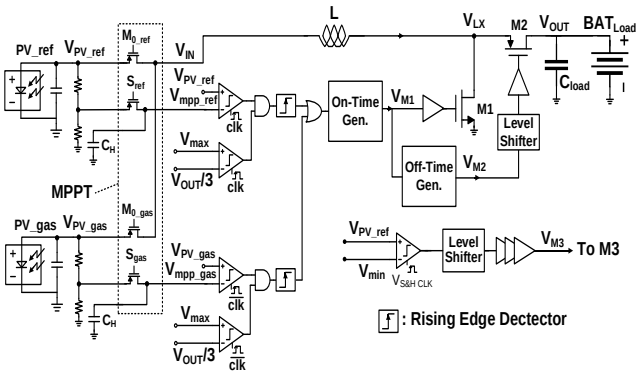

Fig. 7. Boost converter and LED controller circuits with MPPT

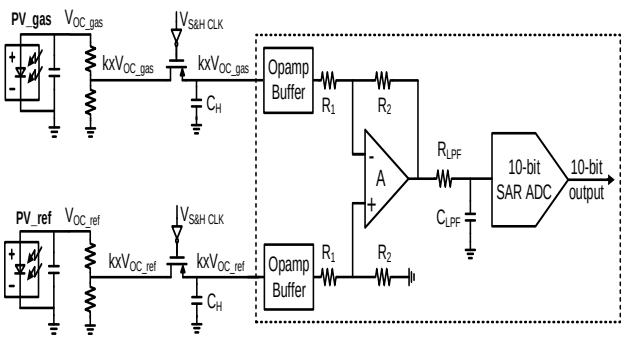

Fig. 8. Gas signal processing diagram

Fig. 7 shows the boost converter and LED controller circuits with MPPT. The system comprises a PV cell covered by the sensor film (PV_gas) and a reference PV cell (PV_ref) to conduct differential gas sensing. V_{IN} is the input of the boost converter, which consists of an inductor, a low-side NMOS power switch, and a high-side PMOS power switch. V_{IN} is selected between V_{PV_ref} and V_{PV_gas} based on the

available energy on two PV cells. The MPPT block samples a fraction of V_{OC} on two PV cells and hold it on the capacitor C_H. One of the comparators is used to compare V_{PV_ref} (V_{PV_gas}) and V_{mpp_ref} (V_{mpp_gas}) for MPPT, and the other compares $V_{OUT}/3$ and V_{max} for detecting the full-charged load battery. Dynamic comparators are adopted for low power consumption. The on-time generator is used for building up inductor current by pulling V_{M1} high in an on-time period ton = 1 μs to turn the low-side power switch M1 on. The off-time generator is used for transferring inductor current to BAT_{Load} by pulling VM2 low that turns M2 on in an off-time period t_{off} [4]. At $V_{S\&H\ CLK}$ rising edge, if VPV_ref < Vmin (low ambient light condition), VM3 is pulled low to turn M3 on that allows BAT_{Bkup} to supply for the LED. Thus, the PV cells are supplied by the LED light to perform gas sensing.

Fig. 8 shows the gas signal processing block which consists of an opamp voltage subtractor and a 10-bit SAR ADC. The subtractor is used to subtract k × V_{OC_ref} and k × V_{OC_gas} for detecting the voltage change on the PV cells (k = 0.8 for our used PV cell characteristic). A 10-bit ADC is required to sense H_2 exposure from 0.1% to 2%. The SAR architecture in [5] is adopted for low power consumption.

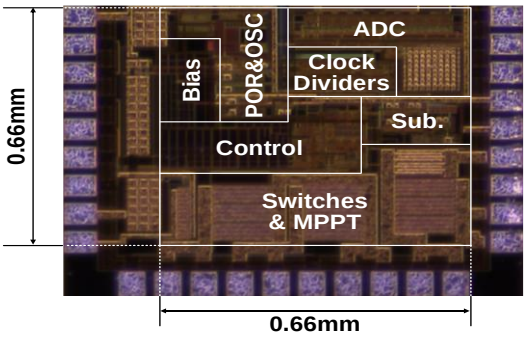

Fig. 9. Die micrograph

III. RESULTS AND DISCUSSIONS

A. Measurement setup

The chip micrograph is shown in Fig. 9, the active area is 0.435 mm^2. Fig. 10 shows the measurement setup for the gas test. The gas sensor consisting of the PV cell covered by the sensor film with a Pd thickness of 110 nm and deposition angle of 45° is placed in a gas chamber, and the ambient light inside the chamber is controlled by the LED. H_2 gas is mixed with a synthetic air (i.e., a mixture of N_2 and O_2), and the concentration of the target gas is controlled by a mass flow controller. The chip is used to take power and gas signals from the output of two PV cells. The ADC output is read by a logic analyzer connected to a computer.

B. Measurement results

In an energy harvesting (EH) system, it is important to provide high end-to-end efficiency ($\eta_{end\text{-}to\text{-}end}$) that is the quotient of output power on the load battery (P_{out}) and maximum available power on two PV cells (P_{mpp}) [6]. As shown in Fig. 11, the EH circuits using a dual-input shared-inductor boost converter achieves a peak end-to-end efficiency of 88% and maintains the efficiency of more than 75% from 100 μW to 4 mW thanks to the offset cancellation technique used for the off-time comparator. The difference between the simulated and measured end-to-end efficiencies increases when output power becomes higher because the conduction loss from the boost converter increases.

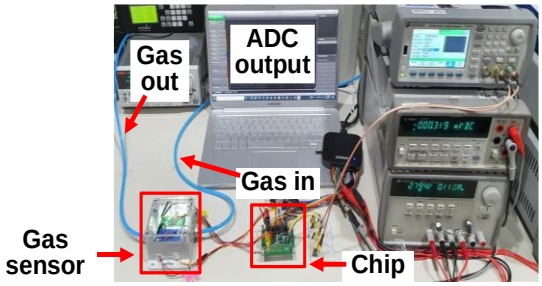

Fig. 10. Measurement setup

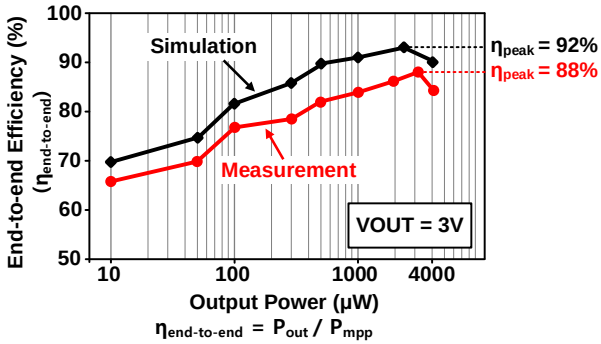

Fig. 11. Dual-Input Shared-Inductor Boost Converter End-to-End Efficiency

Fig. 12 shows the EH efficiency with the different gas concentrations. The higher the gas concentration is, the lower the efficiency becomes in both dual-input and single-input converter structures because the output power of PV_gas decreases. However, the dual-input shared-inductor converter shows up to 11% end-to-end efficiency improvement at 2% H_2 concentration compared to the single-input converter with two PV cells connected in parallel.

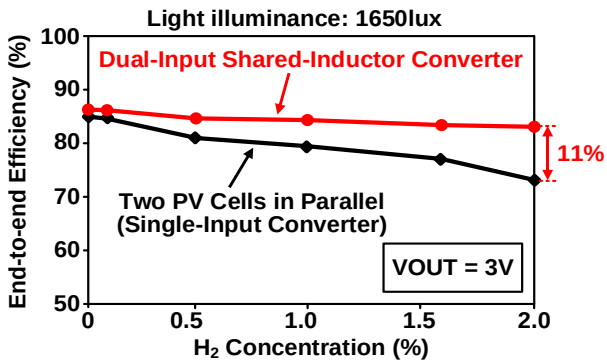

Fig. 12. End-to-End Efficiency with the different gas concentration

From the real-time gas sensing test, the ADC output code that is in decimal digits obtained with varying H_2 concentrations (0.1%, 0.5%, 1%, 1.6%, and 2%) are shown Fig. 13.

Table I shows the performance summary and comparison to other designs. This work achieves competitive EH performance while providing embedded gas sensing

TABLE I. Performance Summary and Comparison with State-of-the-Arts

	Y. Qiu ISSCC 2011 [6]	A. Shrivastava VLSI 2014 [7]	S. S. Amin ISSCC 2018 [8]	J. Courbat Sens. Act. B 2011 [9]	D. Spirjakin Sens. Act. A 2016 [10]	Pewatron TB600B-NO_2-5 [11]	This work
Application	PV Charger	PV Charger	PV Charger	NH_3 Gas Sensor	Hazardous and Combustible Gases Detection	NO_2 Gas Sensor	**PV Charger + H_2 Gas Sensor**
Converter Architecture	Inductive Boost	Inductive Buck/Boost	Inductive Buck-Boost	X	X	X	**Inductive Boost**
Output Power	2µW–6mW *	<100mW	1µW–60mW	X	X	X	**10µW–4mW**
Quiescent Current or Power	1.95µW	1.2µW	262nA	X	X	X	**289nA**
Peak End-to-End Efficiency	70%	92%	89%	X	X	X	**88%**
Sensor Type	X	X	X	Colorimetric	Catalytic	Electrochemical	**Colorimetric**
Sensing Power Consumption **	X	X	X	8mW	225mW	25mW	**1.2µW**
Sensor Size	X	X	X	>1cm³	604mm³	5.75cm³	**25mm³**

* Estimated from the measured input power and efficiency ** Gas sensor + GSP power consumption in continuous mode operation

function. Thanks to integrating the sensor film with the PV cell, the gas sensor can be self-powered and only requires 1.2 µW for GSP, unlike other sensors. The sensor size is only 25 mm^3 as the sensor film is thin and does not require local heating.

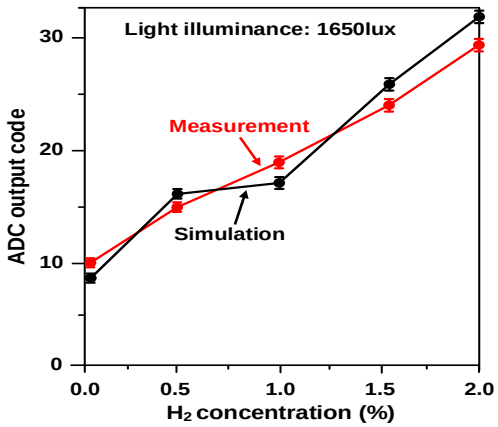

Fig. 13. Measured sensor sensitivity

IV. CONCLUSION

An IC for photovoltaic energy harvesting and colorimetric H_2 gas sensing is presented. The dual-input inductor-shared boost converters are used for harvesting power from two PV cells after gas exposure. In addition, split-capacitor DAC architecture are adopted to occupy small area. The IC is designed by 0.18µm CMOS process. The boost converter achieves high peak efficiency of 88% with low quiescent current of 289nA. The dual-input shared-inductor boost converter shows efficiency enhancement of 11% at 2% H_2 gas concentration. Gas sensing interface circuit with on-chip offset calibration had low offset of 500µV and consumed low power of 1.2µW. 10-bit SAR ADC could measure H_2 exposure from 0.1% to 2%. Our proposed IC is well suitable for wireless sensor networks which senses H_2 exposure in indoor workplaces due to its high efficiency energy harvesting characteristic and small number of external components.

ACKNOWLEDGMENT

This work was supported by the Ministry of Science and ICT, Korea under the ITRC Program (IITP-2020-0-01778) and the DGIST R&D Program (21-IJRP-01)

REFERENCES

[1] M. Alexy, M. Hanko, S. Rentmeister, J. Heinze, “Disposable optochemical sensor chip for nitrogen dioxide detection based on oxidation N,N′-diphenyl-1,4-phenylenediamine,” *Sens. Actuator B-Chem.*, vol. 114, no. 2, pp. 916–927, 2006.

[2] M.-H. Seo, K. Kang, J.-Y. Yoo, J. Park, J.-S. Lee, I. Cho, B.-J. Kim, Y. Jeong, J.-Y. Lee, B. Kim, J. Rho, J.-B. Yoon, and I. Park, “Chemo-Mechanically Operating Palladium-Polymer Nanograting Film for a Self-Powered H2 Gas Sensor,” *ACS Nano*, vol. 14, no. 12, pp. 16813-16822, 2020.

[3] A. Khaligh and O. C. Onar, “Energy harvesting: solar, wind, and ocean energy conversion systems,” CRC Press, Taylor & Francis Group, 2010.

[4] Y.-H. Wang, Y.-W. Huang, P.-C. Huang, H.-J. Chen, and T.-H. Kuo, “A Single-Inductor Dual-Path Three-Switch Converter with Energy-Recycling Technique for Light Energy Harvesting,” *IEEE Journal of Solid-State Circuits*, vol. 51, no. 11, pp. 2716–2728, Nov. 2016.

[5] A. Agnes, E. Bonizzoni, P. Malcovati, and F. Maloberti, “A 9.4-ENOB 1V 3.8µW 100kS/s SAR ADC with Time-Domain Comparator,” *2008 IEEE International Solid-State Circuits Conference - Digest of Technical Papers*, Feb. 2008. pp. 246–247.

[6] Y. Qiu, C. Van Liempd, B. Op het Veld, P. G. Blanken, and C. Van Hoof, “5 -to-10 mW input power range inductive boost converter for indoor photovoltaic energy harvesting with integrated maximum power point tracking algorithm,”

in *IEEE Int. Solid-State Circuits Conf. (ISSCC) Dig. Tech. Papers* , Feb. 2011, pp. 118–120.

[7] A. Shrivastava, Y. K. Ramadass, S. Khanna, S. Bartling, and B. H. Calhoun, "A 1.2 μW SIMO energy harvesting and power management unit with constant peak inductor current control achieving 83–92% efficiency across wide input and output voltages," in *Symp. VLSI Circuits Dig. Tech. Papers*, Jun. 2014, pp. 1–2.

[8] S. S. Amin and P. P. Mercier, "MISIMO: A multi-input single-inductor multi-output energy harvester employing event-driven MPPT control to achieve 89% peak efficiency and a 60,000x dynamic range in 28 nm FDSOI," in *IEEE Int. Solid-State Circuits Conf. (ISSCC) Dig. Tech. Papers*, Feb. 2018, pp. 144–146.

[9] J. Courbata, D. Briand, J. Wollenstein, and N.F. de Rooij, "Polymeric foil optical waveguide with inkjet printed gas sensitive film for colorimetric sensing," *Sens. Actuators B*, vol. 160, pp. 910–915, 2011.

[10] D. Spirjakin, Alexander M. Baranov, Andrey Somov, and Vladimir Sleptsov, "Investigation of heating profiles and optimization of power consumption of gas sensors for wireless sensor networks," *Sens. Actuators A*, vol. 247, pp. 247–253, Aug. 2016.

[11] Pewatron, TB600B-NO2-5.

Phan Dang Hung received the B.S. degree from Hanoi University of Science and Technology, Hanoi, Vietnam, in 2017, and the M.S. degree from the Korea Advanced Institute of Science and Technology (KAIST), Daejeon, Korea, in 2019. He is currently working toward the Ph.D. degree at KAIST. His research interests include sensor interface, power management, and energy harvesting ICs.

Min Kyu Je received the B.S., M.S., and Ph.D. degrees, all in Electrical Engineering, from Korea Advanced Institute of Science and Technology (KAIST), Daejeon, Korea, in 1996, 1998, and 2003, respectively.

In 2003, he joined Samsung Electronics, Giheung, Korea, as a Senior Engineer and worked on multi-mode multi-band RF transceiver SoCs for GSM/GPRS/EDGE /WCDMA standards. From 2006 to 2013, he was with Institute of Microelectronics (IME), Agency for Science, Technology and Research (A*STAR), Singapore. He worked as a Senior Research Engineer from 2006 to 2007, a Member of Technical Staff from 2008 to 2011, a Senior Scientist in 2012, and a Deputy Director in 2013. From 2011 to 2013, he led the Integrated Circuits and Systems Laboratory at IME as a Department Head. In IME, he led various projects developing low-power 3D accelerometer ASICs for high-end medical motion sensing applications, readout ASICs for nanowire biosensor arrays detecting DNA/RNA and protein biomarkers for point-of-care diagnostics, ultra-low-power sensor node SoCs for continuous real-time wireless health monitoring, and wireless implantable sensor ASICs for medical devices, as well as low-power radio SoCs and MEMS interface/control SoCs for consumer electronics and industrial applications. He was also a Program Director of NeuroDevices Program under A*STAR Science and Engineering Research Council (SERC) from 2011 to 2013, and an Adjunct Assistant Professor in the Department of Electrical and Computer Engineering at National University of Singapore (NUS) from 2010 to 2013. He was an Associate Professor in the Department of Information and Communication Engineering at Daegu Gyenogbuk Institute of Science and Technology (DGIST), Korea from 2014 to 2015. Since 2016, he has been an Associate Professor in the School of Electrical Engineering at Korea Advanced Institute of Science and Technology (KAIST), Korea.

His main research areas are advanced IC platform development including smart sensor interface ICs and ultra-low-power wireless communication ICs, as well as microsystem integration leveraging the advanced IC platform for emerging applications such as intelligent miniature biomedical devices, ubiquitous wireless sensor nodes, and future mobile devices. He is an editor of 1 book, an author of 6 book chapters, and has more than 300 peer-reviewed international conference and journal publications in the areas of sensor interface IC, wireless IC, biomedical microsystem, 3D IC, device modeling and nanoelectronics. He also has more than 50 patents issued or filed. He has served on the Technical Program Committee and Organizing Committee for various international conferences, symposiums and workshops including IEEE International Solid-State Circuits Conference (ISSCC), IEEE Asian Solid-State Circuits Conference (A-SSCC) and IEEE Symposium on VLSI Circuits (SOVC). He is currently working as a Distinguished Lecturer of IEEE Circuits and Systems Society.